D4-180I-E, D4-225A-E, D4-225I-E, D4-260A-E, D4-260I-E, D4-300A-E, D4-300I-E

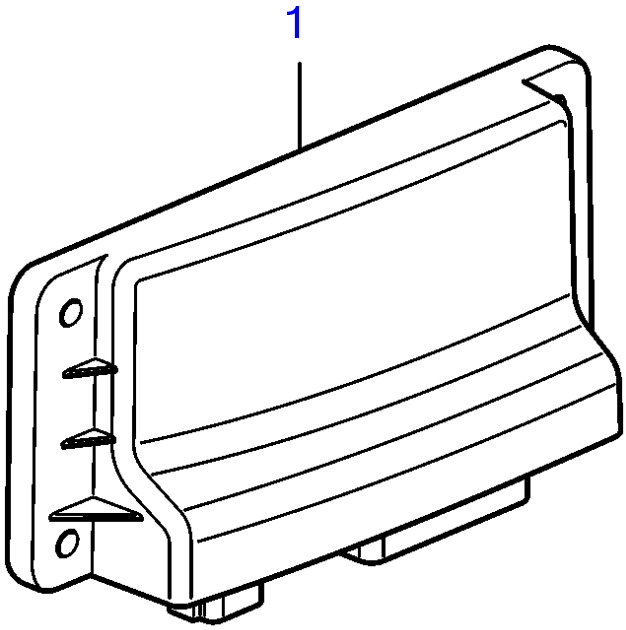

25275

D4-180I-E, D4-225A-E, D4-225I-E, D4-260A-E, D4-260I-E, D4-300A-E, D4-300I-E

REF	PART NO.	QTY	DESCRIPTION	NOTES
1	21469067	1	Control unit	SCU, Sterndrive joystick
	3809286	1	Software	Warehouse programming. This p/n can not be ordered, but will be used for invoicing.
	3809285	1	Software	Vodia-programming. This p/n can not be ordered, but will be used for invoicing.